Polo 1995 ➤

Automatic gearbox 001 self-diagnosis									
Gearbox ID	CMH	DPP	CMJ	DPN	EAR	EAT	EHD	EHE	ERZ
	ESA	EAW							

Edition 02.2001

Protected by copyright. Copying for private or commercial purposes, in part or in whole, is not permitted unless authorised by Volkswagen AG. Volkswagen AG does not guarantee or accept any liability with respect to the correctness of information in this document. Copyright by Volkswagen AG.
satelettronica

List of Workshop Manual Repair GroupsList of Workshop Manual Repair GroupsList of Workshop Manual Repair Groups

Polo 1995 ➤

Automatic gearbox 001 self-diagnosis

Repair Group

01 - Self-diagnosis

satelettronica

Protected by copyright. Copying for private or commercial purposes, in part or in whole, is not permitted unless authorised by Volkswagen AG. Volkswagen AG does not guarantee or accept any liability with respect to the correctness of information in this document. © Copyright by Volkswagen AG.

Technical information should always be available to the foremen and mechanics, because their careful and constant adherence to the instructions is essential to ensure vehicle road-worthiness and safety. In addition, the normal basic safety precautions for working on motor vehicles must, as a matter of course, be observed.

All rights reserved.
No reproduction without prior agreement from publisher.

Copyright © 2010 Volkswagen AG, Wolfsburg

Contents

01 - Self-diagnosis . . . 1

1 Self-diagnosis function . . . 1
1.1 Self-diagnosis function . . . 1
1.2 Data bus . . . 1
1.3 Technical data of self-diagnosis . . . 4
1.4 Self-diagnosis - Guide for automatic gearbox . . . 4

2 Performing self-diagnosis . . . 5
2.1 Performing self-diagnosis . . . 5
2.2 Safety precautions . . . 5
2.3 Locations of diagnosis connections . . . 6
2.4 Connecting vehicle diagnosis, testing and information system VAS 5051 . . . 6
2.5 Connecting fault reader V.A.G 1551 and selecting functions . . . 7
2.6 Automatic test sequence . . . 7
2.7 List of selectable functions . . . 9
2.8 Interrogating fault memory . . . 9

3 Fault table . . . 10
3.1 Fault table . . . 10

4 Erasing fault memory . . . 15
4.1 Erasing fault memory . . . 15

5 Initiating basic setting . . . 16
5.1 Initiating basic setting . . . 16

6 Read measured value block . . . 17
6.1 Read measured value block . . . 17
6.2 Test table . . . 18

7 End output . . . 24
7.1 End output . . . 24

8 Checking solenoid valves whilst driving . . . 25
8.1 Checking solenoid valves whilst driving . . . 25
8.2 For vehicles up to >09.99 . . . 25
8.3 On vehicles from 10.99 > . . . 26

9 Gearbox: Electrical check . . . 27
9.1 Gearbox: Electrical check . . . 27
9.2 Electrical check for vehicles up to > 09.99 (with 45-pin control unit connector) . . . 29
9.3 Test table for vehicles up to > 09.99 (with 45-pin control unit connector) . . . 30
9.4 Electrical check for vehicles from 10.99 >(with 68-pin control unit connector) . . . 35
9.5 Test table for vehicles from 10.99 > (with 68-pin control unit connector) . . . 37

10 Definitions . . . 42
10.1 Definitions . . . 42

Protected by copyright. Copying for private or commercial purposes, in part or in whole, is not permitted unless authorised by Volkswagen AG. Volkswagen AG does not guarantee or accept any liability with respect to the correctness of information in this document. Copyright by Volkswagen AG.
satelettronica

Protected by copyright. Copying for private or commercial purposes, in part or in whole, is not permitted unless authorised by Volkswagen AG. Volkswagen AG does not guarantee or accept any liability with respect to the correctness of information in this document. Copyright by Volkswagen AG.

satelettronica

01 - Self-diagnosis

1 - Self-diagnosis function

1.1 - Self-diagnosis function

The automatic gearbox is controlled electro-hydraulically.

The term "self-diagnosis" is specifically for the electronic/electric control.

Always perform a self-diagnosis before the fault search.

Additional information

- Workshop Manual Polo 1995 ▸, Automatic gearbox 001
- "Current flow diagrams, Electrical fault finding and Fitting locations" binder, Polo 1995 ▸"
- Self-study programme No. 176.

1.2 - Data bus

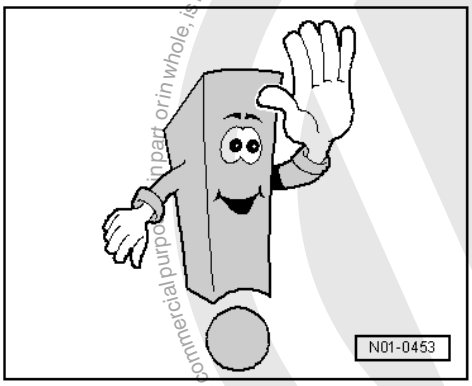

Vehicles with data bus (from 10.99 ▸)

A data bus is fitted in every vehicle from 10.99 with one exception.

Exception: The gearbox EAW for the Japanese market. Communication with the engine control unit is generated via single wires.

Comprehensive information on the "data bus" is given in self study programme No. 186.

Advantages:

- Rapid data transfer between the control units
- Less wiring in vehicle

The automatic gearbox control unit sends signals into the data bus and uses signals from it. It exchanges signals (information) with other control units.

Examples of signals from data bus (sent by engine control unit)

- Accelerator pedal position (throttle valve position)
- Kickdown
- Engine speed

Copyright by Volkswagen AG. Volkswagen AG does not guarantee or accept any liability with respect to the correctness of information in this document. Copyright by Volkswagen AG. Protected by copyright. Copying for private or commercial purposes, in part or in whole, is not permitted unless authorised by Volkswagen AG.
satelettronica

- Engine torque

Examples of signals into data bus (used by engine control unit)

- Cruise control system
- Ignition timing influences

Not only does the engine control unit exchange data with other control units, the other control units exchange data with each other via the data bus, as in this example.

For example, the dash panel insert with diagnostic interface for data bus -J533- (or -J285-) receives the speed signal via the data bus from the automatic gearbox control unit.

It is often the case that other systems can be coded. If they are incorrectly coded, faults often occur which do not have their origin in the automatic gearbox although a fault is stored in the fault memory of the automatic gearbox control unit.

If the automatic gearbox control unit detects that signals are missing or faulty, the data bus itself, another system or a component of another system may be defective.

Therefore, always perform self-diagnosis of affected control units.

When using the current flow diagram to check the routing of wiring, please ensure that the data bus wiring is okay.

Safety functions of gearbox control unit

The automatic gearbox control unit -J217- receives information from components that effect selection of gears and passes the information on to the valve body solenoid valves which via hydraulic switching control the switch elements.

Control units up to 09.99 feature two programmes to allow different driving styles: sporty ("SPORT" programme) or economical ("ECO" programme).

This two programmes are switched by the control unit automatically.

The control unit is equipped with a fault memory so that in the event of an electronic/electrical component failure or on open circuit the fault can be determined quickly. Fault are recognized by electrical signals and stored in the fault memory.

Control unit -J217- with driving situation gear changes (Fuzzy Logic) from 10.99

Determining the driving situation and driving resistance dependent gear change point happens automatically.

Advantages:

- Gear changes will be consumption orientated
- Maximum engine output is always available
- Individual adaption of gear change points in all driving situations

Gearbox control unit fault recognition

The control unit recognizes faults during vehicle operation and stores them in a fault memory => Fault tables, from page 10

After analysing the information the control unit distinguishes between sporadic faults and faults present at this moment (static) and stores these.

If the fault is not present for a predetermined time or when driving over a longer distance, it is no longer recognized and becomes a sporadic fault.

A fault is also changed to a sporadic fault when the fault memory is not erased after repairs.

Protected by copyright. Copying for private or commercial purposes, in part or in whole, is not permitted unless authorised by Volkswagen AG. Volkswagen AG does not guarantee or accept any liability with respect to the correctness of information in this document. Copyright by Volkswagen AG.

sateletronica

Sporadic faults will be displayed as "sporadically occuring faults" when the fault memory is interrogated.

If the sporadic fault is not present for a predetermined time or when driving over a longer distance, the fault is erased in the fault memory.

Fault memory on vehicles up to 09.99

The control unit fault memory is a "volatile memory". Faults stored are erased when the control unit is not supplied with a current. If the control unit connection or the vehicle battery is disconnected for a longer period, the fault memory is empty after approx. 1 hour. Faults present will then be recognized again when driving next.

Fault memory on vehicles from 10.99

Faults remain saved even if control unit has no power supply.

Safety functions of gearbox control unit

If faults occur whilst driving, the control unit can activate supplementary functions or an emergency running programme. They can affect the quality and function of the gear changes.

In emergency running, the 3rd and reverse gears can be selected using the gear shift lever.

On vehicles from 10.99, the first gear can also be selected using the gear shift lever.

If the fault occurs in "P", "N" or "R" then the emergency running mode for "P", "N" or "R" is activated.

The gearbox will remain in emergency running mode; until the fault is no longer recognized by the control unit over a predetermined period.

Faults which may lead to emergency running:

Open circuit in wiring, short-circuit, electrical or hydraulic components defective.

Renewing control units

If control units are renewed, the system must be put into the basic setting => Page 16 , Initiating basic setting.

Fault reader V.A.G 1551 and tester VAS 5051

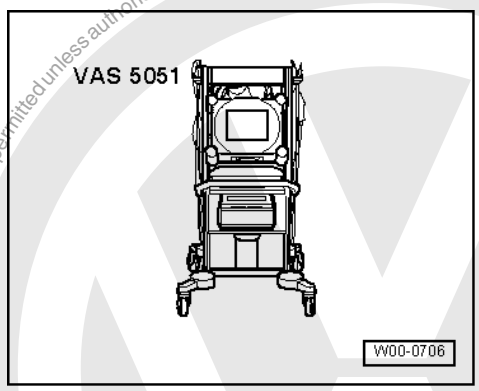

Electrical faults that affect vehicle performance can be determined with these devices.

Functions which can be performed using this test equipment in self-diagnosis mode => page 9 , list of selectable functions.

Protected by copyright. Copying for private or commercial purposes, in part or in whole, is not permitted unless authorised by Volkswagen AG. Volkswagen AG does not guarantee or accept any liability with respect to the correctness of information in this document. Copyright by Volkswagen AG.
satelettronica

1.3 - Technical data of self-diagnosis

Memory	
-Non-volatile memory - Volatile memory	from 10.99 up to 09.99
Data output	
- Rapid data transfer - Flash code output	yes no
Data transfer between control units via: - single wires	up to 09.99
- Data bus Exception: 001 927 749 M => Page 8 , control unit identification	from 10.99
Final control diagnosis	no
Basic setting	yes
Coding control unit	no
Reading measured value block	yes

1.4 - Self-diagnosis - Guide for automatic gearbox

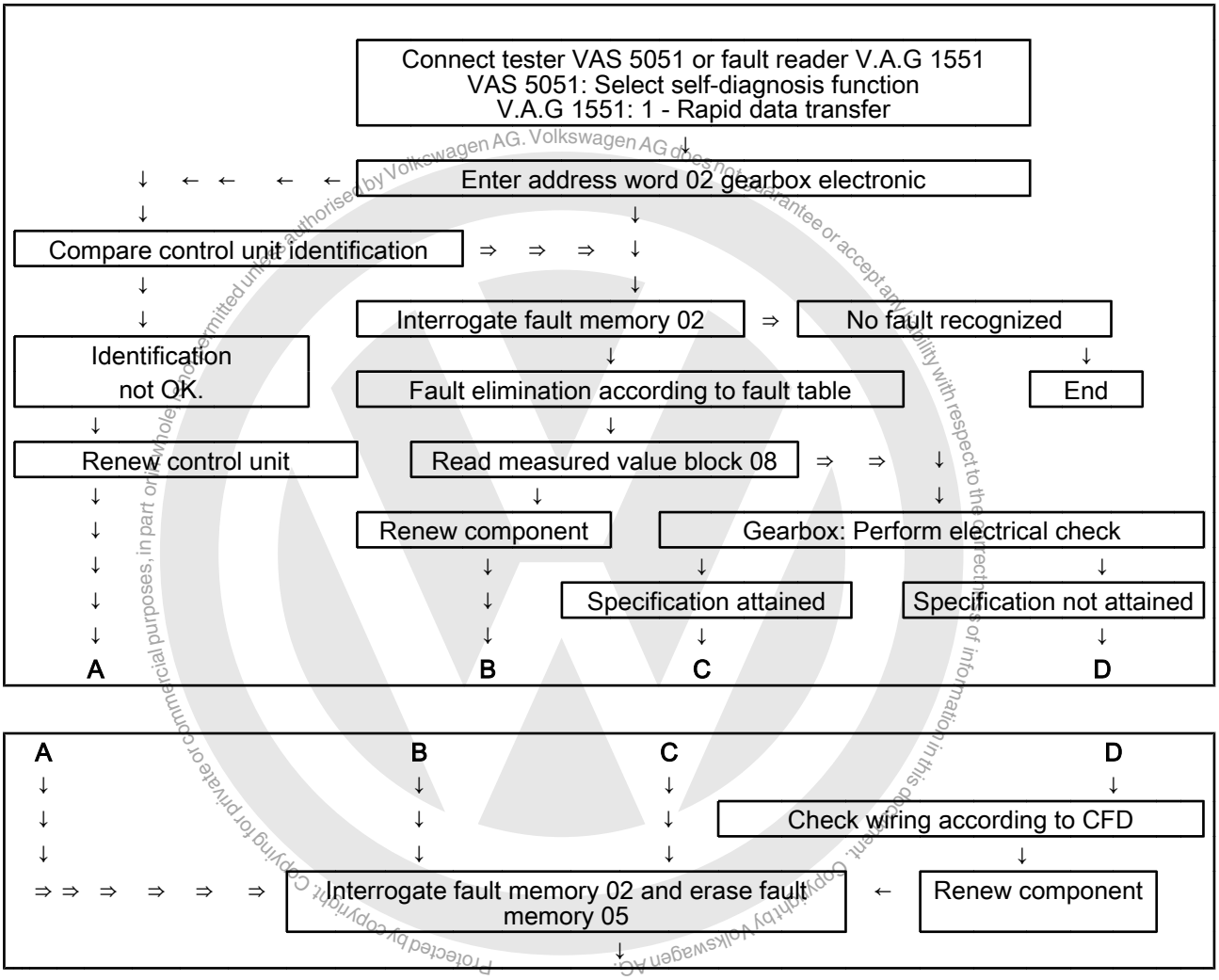

Protected by copyright. Copying for private or commercial purposes, in part or in whole, is not permitted unless authorised by Volkswagen AG. Volkswagen AG does not guarantee or accept any liability with respect to the correctness of information in this document. Copyright by Volkswagen AG.

satelettronica

Initiate basic setting 04
(only initiate when the basic setting requests it)

↓

Carry out a road test and
interrogate fault memory 02 again

↓

If "no fault recognized !" is indicated on display
the self-diagnosis is completed

If after completing the self-diagnosis the automatic gearbox continues to operate with faults, then continue fault finding using fault finding programme.

=> "Fault finding" binder. Power transmission; No. 14

2 - Performing self-diagnosis

2.1 - Performing self-diagnosis

2.2 - Safety precautions

Note!
◆
◆

Test conditions:

- Selector lever in position "P" and handbrake applied.

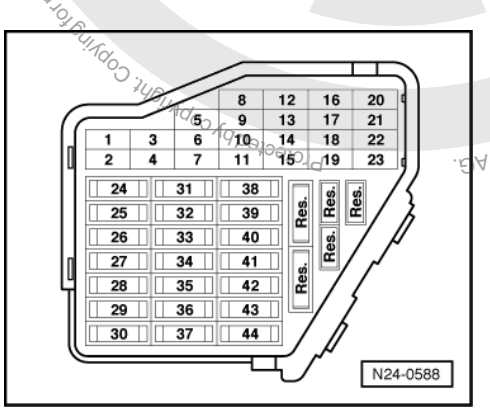

- Vehicle voltage supply in order.
- Fuses No. 14, 21, 25, 29 and 33 OK.
- Fuses OK according to current flow diagram
- Fuses in main fuse box OK.
- Check earth connections for gearbox:

- Check earth connections for corrosion and poor contact; repair if necessary.
- Earth connection point is located below battery.
- Check battery earth strap and earth strap between battery and gearbox.

Copyright by Volkswagen AG. Copying for private or commercial purposes, in part or in whole, is not permitted unless authorised by Volkswagen AG. Volkswagen AG does not guarantee or accept any liability with respect to the correctness of information in this document.
satelettronica

2.3 - Locations of diagnosis connections

The vehicle could have the diagnosis connection in a number of places depending on the year of manufacture. A clear indication of where the connection is located can be found in workshop manual

=> Automatic gearbox 001; Repair group 37; Location of diagnosis connections Location of diagnosis connections

All functions which could previously be performed with V.A.G 1551/1552 can also be performed with the new tester VAS 5051 in the operating mode vehicle self-diagnosis:

2.4 - Connecting vehicle diagnosis, testing and information system VAS 5051

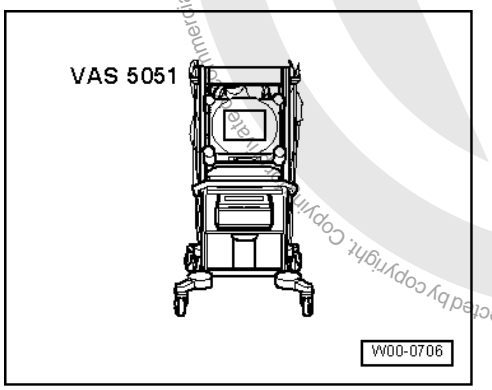

Special tools, workshop equipment, testers, measuring instruments and auxiliary items required

- VAS 5051 Vehicle diagnosis, testing and information system

- Connect diagnosis cable connector VAS 5051/1 or VAS 5051/3 to diagnosis connection.

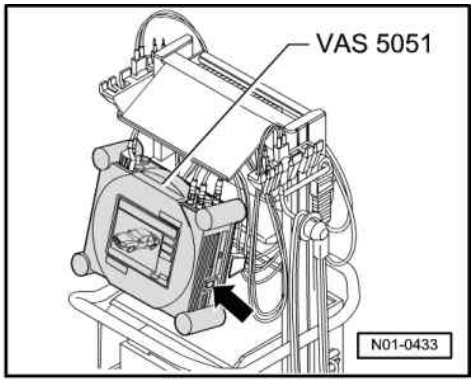

- -> Switch on tester -arrow-.

Now the tester requires approx. 5 minutes to run up.

- Switch on ignition.
- Select the zone "Vehicle self-diagnosis" on touch screen.

The display will now guide you further.

Protected by copyright. Copyright by Volkswagen AG.
Copyright by Volkswagen AG. Volkswagen AG does not guarantee or accept any liability with respect to the correctness of information in this document.
Reproduction, distribution and/or publication of this document is not permitted unless authorised by Volkswagen AG.
For commercial purposes, in whole or in part.
satelettronica

2.5 - Connecting fault reader V.A.G 1551 and selecting functions

Additional information

- Workshop Manual Polo 1995 ‣, Automatic gearbox 001
- "Current flow diagrams, Electrical fault finding and Fitting locations" binder, Polo 1995 ‣"
- Technical service handbook
- Parts catalogue

- With ignition switched off, connect fault reader V.A.G 1551 using diagnosis cable V.A.G 1551/3.

-> Indicated on display:

```
V.A.G - SELF-DIAGNOSIS      HELP
1 - Rapid data transfer1)
2 - Flash code output1)
```

1) appears alternately

- Additional operating instructions can be called up by pressing the HELP key of V.A.G 1551.
- The ⇒ key is used for advancing within the programme sequence.

=> Fault reader V.A.G 1551 operating instructions.

2.6 - Automatic test sequence

The automatic test sequence interrogates all the fault memories of the control units.

- Before selecting the gearbox control unit, perform the automatic test sequence. Faults of other control units can influence the gearbox control unit.
- Switch on ignition.

-> Indicated on display:

```
V.A.G - SELF-DIAGNOSIS      HELP
1 - Rapid data transfer1)
2 - Flash code output1)
```

1) Is displayed alternately

- Press key -1- for "Rapid data transfer" operating mode.
- Switch on printer with the Print key (indicator lamp in key lights up).

-> Indicated on display:

```
Rapid data transfer      HELP
Select function XX
```

- Press key -0- twice; 00 enters the "Interrogate automatic test sequence" function.
- Confirm entry with Q key.

Then all control unit identifications, together with entries which may be in fault memory, are displayed.

- After test sequence, the V.A.G 1551 returns to the following start position:

-> Indicated on display:

```
V.A.G - SELF-DIAGNOSIS      HELP
1 - Rapid data transfer1)
2 - Flash code output1)
```

1) appears alternately

Protected by copyright. Copyright by Volkswagen AG. Volkswagen AG does not guarantee or accept any liability with respect to the correctness of information in this document. Copyright by Volkswagen AG. Protected by copyright. Copyright by Volkswagen AG. Not permitted unless authorised by Volkswagen AG. Volkswagen AG does not guarantee or accept any liability with respect to the correctness of information in this document. Copyright by Volkswagen AG.
satelettronica

Select automatic gearbox control unit

- Switch on ignition.
- Switch on printer with the Print key (indicator lamp in key lights up).
- Press key 1 for "Rapid data transfer" mode.

-> Indicated on display:

```
Rapid data transfer      HELP
Enter address word XX
```

- Press keys 0 and 2. (Enter the address word "gearbox electronics" with 02.)

-> Indicated on display:

```
Rapid data transfer      Q
02 Gearbox electronics
```

- Confirm entry with key Q.

-> Indicated on display:

```
001927749C     AG4 Gearbox     001
2009 □
```

The control unit identification, the coding and the dealership number of the V.A.G 1551 are displayed:

Example for control unit identification

Depending upon build level (programme level) the control unit can indicate a different control unit identification, to that shown in the example. Allocation of control unit => Parts catalogue.

- 001927749C: Part No.
- AG4 Gearbox 001: 4-speed automatic gearbox 001
- 0004: EPROM (programme level)

  The program level can also be read out in a measured value block.

- Coding 00000: is not required at present.
- WSC 00000: V.A.G 1551 dealership number with which the last coding was performed.

-> Indicated on display:

```
Control unit does not answer!      HELP
```

- By pressing the HELP key, a list of possible fault causes is printed out.
- After eliminating the possible causes of faults, again enter the address word 02 for "gearbox electronics" and confirm.

If "Control unit does not answer!" again appears:

-> Indicated on display:

```
Control unit does not answer!      HELP
```

Check control unit voltage supply.

- Perform test step 1 => Page 27 , Electrical check.
- Check wiring connections to diagnostic sockets

=> "Current flow diagrams, Electrical fault finding and Fitting locations" binder, Polo 1995▸.

- => Fault table, page 10 under fault code 65535 control unit faulty!
- Press ⇒ key.

-> Indicated on display:

Protected by copyright. Copying for private or commercial purposes, in part or in whole, is not permitted unless authorised by Volkswagen AG. Volkswagen AG does not guarantee or accept any liability with respect to the correctness of information in this document. Copyright by Volkswagen AG.
satelettronica

```
Rapid data transfer       HELP
Select function XX
```

- After the HELP key is pressed, a list of the possible functions is printed out.

2.7 - List of selectable functions

	Page
01 - Interrogate control unit version => Performing self-diagnosis	7
02 - Interrogate fault memory	9
04 - Initiate basic setting	16
05 - Erase fault memory	15
06 - End output	
08 - Read measured value block	17

Further functions, which can be printed out by pressing the HELP key, need not be considered.

- After interrogating a function the V.A.G 1551 returns to the following start position:

-> Indicated on display:

```
Rapid data transfer       HELP
Select function XX
```

2.8 - Interrogating fault memory

- Connect fault reader V.A.G 1551 and enter address word "02 Gearbox electronics" and advance until "Select function XX" appears in the display => from page 7 .

-> Indicated on display:

```
Rapid data transfer       HELP
Select function XX
```

- Press keys 0 and 2. (The function "Interrogate fault memory" is selected with 02).

-> Indicated on display:

```
Rapid data transfer      Q
02 - Interrogate fault memory
```

- Confirm entry with key Q.

-> The number of stored faults or "No fault recognised" appears in the display.

```
X Faults recognised!
```

Output on printer V.A.G 1551	
No fault recognised!	If "No fault recognised" appears after performing repairs, the self-diagnosis is completed. In the event that the automatic gearbox does not operate properly despite self-diagnosis, carry out repairs as per fault finding programme. => "Fault finding, Power transmission" binder, No. 14

The stored faults are displayed in turn and printed out.

- Press ⇒key.
- After the last fault has been displayed and printed out, the faults should be rectified as described in the fault table => from page 10 .

Protected by copyright. Copyright by Volkswagen AG. Copying for private and commercial purposes, in part or in whole, is not permitted unless authorised by Volkswagen AG. Volkswagen AG does not guarantee or accept any liability with respect to the correctness of information in this document.
satelettronica

- Press ⇒ key.

-> Indicated on display:

```
Rapid data transfer      HELP
Select function XX
```

After interrogating the fault memory and rectifying the faults:

- Erase fault memory => Page 15

3 - Fault table

3.1 - Fault table

Output on printer V.A.G 1551	Possible cause of fault	Rectifying fault
00258 Solenoid valve 1 -N88- Open/short circuit to positive1) Short to earth1)	Wiring open circuit or short to earth Solenoid valve 1 -N88- defective	- Check wiring and connections according to CFD2) - Read measured value block =>Page 17 ; Display group number 004 - Perform electrical tests =>from page 27

1) One of these displays appears in addition to relevant component.

2) First check connections for contact corrosion or water ingress and renew if necessary. If solenoid faults are displayed then especially check the connection on top of gearbox and solenoid valve wiring loom.

Output on printer V.A.G 1551	Possible cause of fault	Rectifying fault
00260 Solenoid valve 2 -N89- Open/short circuit to positive1) Short to earth1)	Wiring open circuit or short to earth Solenoid valve 2 -N89- defective	- Check wiring and connections according to CFD 2) - Read measured value block =>page 17 ; Display group number 004 - Perform electrical tests =>from page 27
00262 Solenoid valve 3 -N90- Open/short circuit to positive1) Short to earth1)	Wiring open circuit or short to earth Solenoid valve 3 -N90- defective	- Check wiring and connections according to CFD 2) - Read measured value block =>Page 17 ; Display group number 004 - Perform electrical tests =>from page 27

1) One of these displays appears in addition to relevant component.

2) First check connections for contact corrosion or water ingress and renew if necessary. If solenoid faults are displayed then especially check the connection on top of gearbox and solenoid valve wiring loom.

Output on printer V.A.G 1551	Possible cause of fault	Rectifying fault
00264	Wiring open circuit or short to earth	- Check wiring and connections according to CFD 2)

Volkswagen AG. Volkswagen AG does not guarantee or accept any liability with respect to the correctness of information in this document. Copyright by Volkswagen AG. Copying for private, commercial purposes, in part or in whole, is not permitted unless authorised by Volkswagen AG. Volkswagen AG does not guarantee or accept any liability with respect to the correctness of information in this document. Copyright by Volkswagen AG.
satelettronica

Output on printer V.A.G 1551	Possible cause of fault	Rectifying fault
Solenoid valve 4 -N91- Open/short circuit to positive1) Short to earth1)	Solenoid valve 4 -N91- defective	- Read measured value block =>Page 17 ; Display group number 003 - Perform electrical tests =>from page 27
00266 Solenoid valve 5 -N92- Open/short circuit to positive1) Short to earth1)	Wiring open or short circuit Solenoid valve 5 -N92- defective	- Check wiring and connections according to current flow diagram2) - Read measured value block =>page 17 ; display group number 004 - Perform electrical tests =>from page 27

1) One of these displays appears in addition to relevant component.

2) First check connections for contact corrosion or water ingress and renew if necessary. If solenoid faults are displayed then especially check the connection on top of gearbox and solenoid valve wiring loom.

Output on printer V.A.G 1551	Possible cause of fault	Rectifying fault
00268 Solenoid valve 6 -N93- Open/short circuit to positive1) Short to earth1)	Wiring open circuit or short to earth Solenoid valve 6 -N93- defective On vehicles up to 09.99: Series resistance -N207- defective	- Check wiring and connections according to CFD 2) - Read measured value block =>page 17 ; Display group number 002 - Perform electrical test =>from page 27
00281 Road speed sender -G68- No signal	Open circuit in wiring Road speed sender -G68- defective	- Check wiring and connections according to current flow diagram - Read measured value block =>Page 27

1) One of these displays appears in addition to relevant component.

2) First check connections for contact corrosion or water ingress and renew if necessary. If solenoid faults are displayed then especially check the connection on top of gearbox and solenoid valve wiring loom.

Output on printer V.A.G 1551	Possible cause of fault	Rectifying fault
00293 Multi-function switch -F125- Undefined switch condition 1) No signal 1)	Wiring open circuit Multi-function switch -F125- not adjusted Multi-function switch -F125- defective	- Check wiring and connections using CFD 2) - Read measured value block =>page 17 ; Display group number 004 Adjust multi-function switch -F125- => Automatic gearbox 001; Repair group 37; Electrical/electronic components and locations; Components on gearbox Electrical/electronic components and locations; Components on gearbox - Perform electrical tests =>from page 27
00296 Kickdown switch -F8-	Wiring open circuit Throttle valve potentiometer -G69- defective	- Check wiring and connections Read measured value block =>Page 17 ; Display group number 004 - Perform electrical tests =>from page 27

Copyright by Volkswagen AG. Volkswagen AG does not accept any liability with respect to the correctness of information in this document. Copyright by Volkswagen AG. Protected by copyright. Copying for private or commercial purposes, in part or in whole, is not permitted unless authorised by Volkswagen AG.
satelettronica

Short to earth	Kickdown switch -F8- defective	

1) One of these displays appears in addition to relevant component.

2) First check connectors for contact corrosion or water ingress and renew if necessary.

Output on printer V.A.G 1551	Possible cause of fault	Rectifying fault
00297 Gearbox speed sender -G38- No signal	Wiring open circuit Gearbox speed sender -G38- defective	- Check wiring and connections according to current flow diagram2) - Read measured value block =>Page 27
00300 Gearbox oil temperature sender -G93-1) Open/short circuit to positive	Wiring open circuit Gearbox oil temperature sender -G93- defective	- Check wiring and connections according to current flow diagram2) - Read measured value block =>page 17 ; Display group number 002 - Perform electrical tests =>from page 27
00350 Earth return wire, modulation valve Output does not switch/short to positive	Wiring open circuit Control unit -J217- defective	- Check wiring and connections - Renew control unit => Automatic gearbox 001; Repair group 37; Electrical/electronic components and locations; Components in vehicle 16

1) The gearbox oil temperature sender displays the ATF temperature.

2) First check connections for contact corrosion or water ingress and renew if necessary. If solenoid faults are displayed then especially check the connection on top of gearbox and solenoid valve wiring loom.

Output on printer V.A.G 1551	Possible cause of fault	Rectifying fault
00518 Throttle valve potentiometer -G69- Signal outside tolerances1) No signal1)	Wiring open or short circuit Defective engine control unit or defective throttle valve potentiometer -G69- (in throttle valve part -J338-) The signal or defective EPC is directed via engine control unit to gearbox control unit and can only be checked in measured value block. If the throttle valve potentiometer (EPC) is indicated in the self-diagnosis as faulty, then always carry out a self-diagnosis of the engine control unit.	- Check wires and connectors according to current flow diagram - Read measured value block =>Page 16

1) One of these displays appears in addition to relevant component.

Output on printer V.A.G 1551	Possible cause of fault	Rectifying fault
00526 2131	Open circuit in wiring	- Check wiring and connections

Protected by copyright. Copying for private or commercial purposes, in part or in whole, is not permitted unless authorised by Volkswagen AG. Volkswagen AG does not guarantee or accept any liability with respect to the correctness of information in this document.
© Copyright by Volkswagen AG.
satelettronica

Output on printer V.A.G 1551	Possible cause of fault	Rectifying fault
Brake light switch -F- Short to positive	Brake light switch -F- defective	- Read measured value block =>Page 27
00529 Speed information missing No signal	Open circuit in wiring	- Check wiring and connections according to CFD - Read measured value block =>Page 17 ; Display group number 001 Check engine control unit => Repair group 01 for relevant engine code - Perform electrical check =>from Page 27

Output on printer V.A.G 1551	Possible cause of fault	Rectifying fault
00545 Engine/gearbox electrical connection Open/short circuit to earth1) Short to positive1)	Wiring open circuit or short earth No connection engine/gearbox control unit The signal for influencing ignition timing point is not transferred or transferred incorrectly between engine and gearbox control units	- Check wiring and connectors according to current flow diagram - Read measured value block =>Page 16
00652 Gear monitoring Implausible signal	Electrical/hydraulic fault Clutch or valve body defective	- Establish, by driving, in which gear the fault occurs =>Page 25

1) One of these displays appears in addition to relevant component.

Output on printer V.A.G 1551	Possible cause of fault	Rectifying fault
00777 Throttle position sender -G79- No signal	Wiring open circuit Throttle position sender -G79- defective The signal from the sender is transmitted via the engine control unit to the gearbox control unit. It can be checked in the measured value block. If the sender is displayed as faulty, a self-diagnosis of the engine control unit must always be performed.	- Check wiring and connections according to current flow diagram2) - Read measured value block =>Page 17 ; Display group number 001 Check engine control unit => Repair group 01 of respective engine code
01166 Engine torque signal Implausible signal	Wiring open circuit The engine torque signal is not transmitted or transmitted incorrectly between engine and gearbox control units	- Check wiring and connectors using current flow diagram

Output on printer V.A.G 1551	Possible cause of fault	Rectifying fault
01192 Torque converter lock-up clutch Defective 1) Mechanical fault 1)	Wiring open circuit Lock-up clutch slips Solenoid valve 4 -N91- defective Valve chest defective	- Check wiring and connections according to current flow diagram - Read measured value block =>Page 17 ; Display group number 003
01236		

Protected by copyright. Copying for private or commercial purposes, in part or in whole, is not permitted unless authorised by Volkswagen AG. Volkswagen AG does not guarantee or accept any liability with respect to the correctness of information in this document. Copyright by Volkswagen AG.
satelettronica

Selector lever lock solenoid -N110- Short to earth1) Open circuit/short to positive1)	Wiring open circuit or short to earth Selector lever lock solenoid -N110- defective	- Read measured value block =>Page 17 ; display group number 004
01312 Drive train data bus defective1) no communication1)	Data bus wiring/connectors defective	- Check data bus wiring and connectors using current flow diagram

1) One of these displays appears in addition to relevant component.

Output on printer V.A.G 1551	Possible cause of fault	Rectifying fault
01314 Engine control unit No communication	Data bus wiring/connectors defective Fault in system: Engine	- Check data bus wiring and connectors using current flow diagram Check engine control unit => Repair group 01 for relevant engine code
Wrong equipment 1)	If the engine control unit can be coded, an incorrect code has been used	
01316 Brake control unit No communication	Data bus wiring/connectors defective Fault in system: ABS	- Check Data bus wiring and connectors according to current flow diagram Check ABS control unit => Repair group 01 for relevant ABS system

1) One of these displays appears in addition to relevant component.

V.A.G 1551 print-out (=> Page 10)	Possible cause of fault	Rectifying fault
65535		- Renew control unit => Automatic gearbox 001; Repair group 37; Electrical/electronic components and locations; Components in vehicle Electrical/electronic components and locations; Components in vehicle
Control unit defective	Control unit -J217- defective	- Initiate basic setting =>page 16

The control unit -J217- should not be renewed until the possible cause of the fault has been determined and the following faults have been rectified:

- mechanical faults
- hydraulic faults
- all affected electrical/electronic components and cable connections.

=> Automatic gearbox 001; Repair group 37; Electrical/electronic components and locations; Components in vehicle Electrical/electronic components and locations Components in vehicle

and the system has been reverted to its basic setting

=> page 16 .

Protected by copyright. Copying for private or commercial purposes, in part or in whole, is not permitted unless authorised by Volkswagen AG. Volkswagen AG does not guarantee or accept any liability with respect to the correctness of information in this document. Copyright by Volkswagen AG.

satelettronica

4 - Erasing fault memory

4.1 - Erasing fault memory

Requirement:

- Fault memory interrogated => page 9 .
- Vehicle stationary.
- Engine speed not above 960 rpm.

After fault memory has been interrogated:

-> Indicated on display:

```
Rapid data transfer      HELP
Select function XX
```

- Press keys 0 and 5. (The function "Erase fault memory" is entered with 05.)

-> Indicated on display:

```
Rapid data transfer      Q
05 Erase fault memory
```

- Confirm entry with key Q.

-> Indicated on display:

```
Warning!
Fault memory was not interrogated.
```

If the ignition was switched off e.g. between interrogating the fault memory and erasing fault memory, the fault memory is then not erased.

- Adhere strictly to the sequence of operations, i.e. first of all interrogate fault memory.

-> Indicated on display:

```
Fault memory is not erased
```

If one or more faults are present.

- Interrogate fault memory => Page 9 .

-> Indicated on display:

```
Rapid data transfer
Fault memory is erased!
```

(The fault memory will be erased approx. 5 seconds. after the display appears.)

The fault memory is now erased.

- End output => page 24 .

- Switch off ignition.

Wait about 1 minute before again interrogating the fault memory.

-> Indicated on display:

```
System cannot be interrogated!
```

-> Print out with printer switched on:

```
1 Fault recognized !
00811     3333
System cannot be interrogated
```

Protected by copyright. Copying for private, commercial purposes, in part or in whole, is not permitted unless authorised by Volkswagen AG. Volkswagen AG does not guarantee or accept any liability with respect to the correctness of information in this document. Copyright by Volkswagen AG.
satelettronica

Control unit -J217- was not given sufficient time to recognize faults.

- Wait about 1 minute before again interrogating the fault memory.
- After interrogating and erasing the fault memory, carry out a test drive and again interrogate the fault memory.

When the fault memory is interrogated, the following display should appear:

"No fault recognized!"

5 - Initiating basic setting

5.1 - Initiating basic setting

The basic setting should be initiated after performing the following repairs:

- Exchanging engine
- Replacing or coding engine control unit
- Removing and installing gearbox
- Removing and installing "electronic accelerator"
- Replacing throttle valve potentiometer -G69-
- Altering throttle valve potentiometer -G69- setting e.g. when adjusting idling switch (engine)
- Removing and installing kick-down switch
- Replacing automatic gearbox control unit -J217-

- Read also:

=> "Special Information Bulletins" binder; Engine; No. 4

- Connect fault reader V.A.G 1551 and enter address word "02 Gearbox electronics" and advance until "Select function XX" appears in the display => from page 7 .

-> Indicated on display:

```
Rapid data transfer       HELP
Select function XX
```

- Press keys 0 and 4. (The function "Initiating basic setting" is selected with 04).

Accelerator pedal must remain in idling position.

-> Indicated on display:

```
Rapid data transfer       Q
04 - Basic setting
```

- Confirm entry with key Q.

-> Indicated on display:

```
Basic setting     HELP
Enter display group number XXX
```

- Press key 0, 0 and 0.
- Confirm entry with key Q.

-> Indicated on display:

```
System in basic setting      0
```

The system is now in the basic setting.

- Depress accelerator pedal as far as kickdown and hold in this position for 3 seconds.

Protected by copyright. Copying for private or commercial purposes, in part or in whole, is not permitted unless authorised by Volkswagen AG. Volkswagen AG does not guarantee or accept any liability with respect to the correctness of information in this document. Copyright by Volkswagen AG.
satelettronica

- Press key ⇒.

-> Indicated on display:

```
Rapid data transfer      HELP
Select function XX
```

6 - Read measured value block

6.1 - Read measured value block

Additional information

◆ "Current flow diagrams, Electrical fault finding and Fitting locations" binder, Polo 1995 ▸"

- Connect fault reader V.A.G 1551 and enter address word "02 Gearbox electronics" and advance until "Select function XX" indicated on display => from page 7 .

-> Indicated on display:

```
Rapid data transfer      HELP
Select function XX
```

- Press keys 0 and 8. (The function "Read measured value block" is selected with 08.)

-> Indicated on display:

```
Rapid data transfer      Q
08 - Read measured value block
```

- Confirm entry with key Q.

-> Indicated on display:

```
Read measured value block
Enter display group number XXX
```

- Enter display group number => List of selectable display group numbers, page 17 .
- Confirm entry with key Q.

```
Read measured value block     1
□ 1    □ 2     3     □ 4
```

-> There are always 4 display zones in the measured value block (if necessary in physical quantities). Decoding the individual values in display zones 1 to 4 =>Test table page 18 .

List of selectable display group numbers

Indicated on display (example)			
Display zones: 1 2 3 4 ¨ ¨ ¨ ¨ ī ī ī ī	Display group No.	Display zone	Description
Read measured value block 1⇒ 28 km/h 1730 rpm 1790 rpm 2	001	1 = 2 = 3 = 4 =	Road speed Gearbox speed sender -G38- (Turbine rpm) Engine speed Selected gear
Read measured value block 2⇒ 0 % 34 % 30.0°C 14.1V	002	1 = 2 = 3 = 4 =	Accelerator pedal value Solenoid valve 6 -N93- (control in %) ATF temperature Battery voltage

Protected by copyright. Copying for private or commercial purposes, in part or in whole, is not permitted unless authorised by Volkswagen AG. Volkswagen AG does not guarantee or accept any liability with respect to the correctness of information in this document. Copyright by Volkswagen AG.
satelettronica

Indicated on display (example)			
Read measured value block 3⇒ 0 km/h 0 % 0 4 %	003	1 = 2 = 3 = 4 =	Road speed Accelerator pedal value Selected gear Solenoid valve 4 -N91- (control in %)
Read measured value block 4⇒ D 00001000 01000000 00000110	004	1 = 2 = 3 = 4 =	Selector lever position Multi-function switch (8 character display) Switch position (8 character display) Switch output (8 character display)
ï ï ï ï ï 1 2 3 4 Display zones			

- If the printer is switched on, the current display is printed out on the log.
- If the specified values are obtained in all the display zones:

- Press key ⇒.

-> Indicated on display:

```
Rapid data transfer       HELP
Select function XX
```

- Enter display group number.

6.2 - Test table

Display Group No.	Display zone	Designation	Test conditions	Specified readout on V.A.G 1551	Rectifying fault
001	1	Vehicle speed	Driving1)	...km/h	Speedometer reading and readout on V.A.G 1551 may differ slightly.
Cont'd	2	Gearbox speed sensor -G38- (turbine rpm)	Driving1) with engine running	rpm	- Check gearbox speed sensor -G38- => Perform electrical tests, from page 27

1) When driving, a second mechanic is needed for reading the specified values.

Display Group No.	Display zone	Designation	Test conditions	Specified readout on V.A.G 1551	Rectifying fault
001 Cont'd	3	Engine speed	With engine running Observe notes on data bus => page 1	... rpm	Speedometer reading and readout on V.A.G 1551 may differ slightly. If necessary tune engine => Repair group 24 or 25 for respective engine code Perform engine control unit self-diagnosis => Repair group 01 for respective engine code Check wiring using current flow diagram

Protected by copyright. Copying for private or commercial purposes, in part or in whole, is not permitted unless authorised by Volkswagen AG. Volkswagen AG does not guarantee or accept any liability with respect to the correctness of information in this document. Copyright by Volkswagen AG.

satelettronica

Group No.	Display zone	Designation	Test conditions		Specified read-out on V.A.G 1551	Rectifying fault
001	4	Gear selected	Driving1)	Neutral (Vehicle stationary)	1	- Check solenoid valves => Perform electrical tests, from page 27
				Reverse (up to approx. 10 km/h)	1	
				1 hydraulic	1	
				2 hydraulic	2	
				3 hydraulic	3H	
				3 mechanical	3M	
				4 hydraulic	4H	
				4 mechanical	4M	

1) When driving, a second mechanic is needed for reading the specified values.

Group No.	Display zone	Designation	Test conditions		Specified readout on V.A.G 1551	Rectifying fault
002	1	Accelerator pedal value	Stationary	Idling	0...1 %	When accelerating from idling to full throttle, % figure continuously increases
		- Observe notes on data bus => page 1		Full throttle	90 %	- Perform self-diagnosis of engine control unit => Repair group 01 of respective engine code Initiate basic setting =>page 16
				Kick down	99 %	
	2	Solenoid valve 6 - N93- (Control in %)	Stationary	Full throttle	88...100 %	- Check solenoid valve -N93- and series resistance =>Perform electrical tests, from page 27
				Idling	0...25 %	
Cont'd	3	ATF temperature, ATF level is checked at approx. 35°C - 45° C	Stationary with engine running. The exact temperature is displayed from approx. 30°C		...°C	- Check gearbox oil temperature sender -G93- => Perform electrical tests, from page 27

Group No.	Display zone	Designation	Test conditions		Specified readout on V.A.G 1551	Rectifying fault
002	4	Battery voltage	Stationary min.		10.8 V	- Check battery voltage in measured value block of any vehicle control unit and compare values
				max.	16.0 V	- Check supply voltage to control unit -J217- => Perform electrical checks, from page 27

Protected by copyright. Copyright by Volkswagen AG. Volkswagen AG does not guarantee or accept any liability with respect to the correctness of information in this document. Copyright by Volkswagen AG. Protected by copyright. Copyright by Volkswagen AG. Reproduction, in whole or in part, is not permitted unless authorised by Volkswagen AG for commercial purposes, in part or in whole, is not permitted unless authorised by Volkswagen AG for commercial purposes or private or commercial purposes, in part or in whole, is not permitted unless authorised by Volkswagen AG.
satelettronica

Group No.	Display zone	Designation	Test conditions	Specified readout on V.A.G 1551	Rectifying fault
003 Cont'd	1	Vehicle speed	Driving1)	...km/h	Speedometer reading and readout on V.A.G 1551 may differ slightly.

1) When driving, a second mechanic is needed for reading the specified values.

Group No.	Display zone	Designation	Test conditions	Specified readout on V.A.G 1551	Rectifying fault
003	2	Accelerator pedal value Observe notes on data bus => page 1	Stationary Idling	0...1 %	When accelerating from idle to full throttle, % figure increases continuously
			Full throttle	90 %	- Perform self-diagnosis of engine control unit
Cont'd			Kick-down	99 %	=> Repair group 01 for respective engine code Bring system to basic setting =>Page 16

Group No.	Display zone	Designation	Test conditions		Specified readout on V.A.G 1551	Rectifying fault
003	3	Gear selected	Driving1)	Neutral (Vehicle stationary)	1	- Check solenoid valves => Perform electrical tests, from page 27
				Reverse (up to approx. 10km/h)	1	
				1 hydraulic	1	
				2 hydraulic	2	
				3 hydraulic	3H	
				3 mechanical	3M	
				4 hydraulic	4H	
Cont'd				4 mechanical	4M	

1) When driving, a second mechanic is needed for reading the specified values.

Display Group No.	Display zone	Designation	Test conditions	Specified readout on V.A.G 1551	Rectifying fault
003	4	Solenoid valve 4 -N91- (Control in %)	Driving1) hydraulic gear	4 - 6 %	- Check solenoid valve -N91- => Perform electrical tests, from page 27
			mechanical gear	94 -96 %	
004	1	Multi-function switch -F125-	Selector lever in P	P	- Check multi-function switch -F125- => Perform electrical tests, from page 27
			R	R	
			N	N	"Er" will be displayed

satelettronica

Display Group No.	Display zone	Designation	Test conditions	Specified readout on V.A.G 1551	Rectifying fault
Cont'd			D	D	for a brief period when changing to another selector lever position.
			3	3	
			2	2	
			1	1	

1) When driving, a second mechanic is needed for reading the specified values.

Display Group No.	Display zone	Designation	Test conditions	Specified readout on V.A.G 1551	Rectifying fault
004	2	Multi-function switch -F125-	Selector lever in P	00000001	- Check multi-function switch -F125- => Perform electrical tests, from page 27
			R	00000010	"Er" will be displayed for a brief period when changing to another selector lever position.
			N	00000100	
			D	00001000	
			3	00010000	
			2	00100000	
Cont'd			1	01000000	

Display Group No.	Display zone	Designation		Test conditions		Specified readout on V.A.G 1551	Rectifying fault
004	3	In this display zone the first six positions are of no consequence					
		Kickdown switch	Position 7	Kickdown	Operated	1	- Check kickdown switch => Perform electrical tests, from page 27
		- Observe notes on data bus => page 1			Not operated	0	
		Brake light switch -F-	Position 8	Brake	Operated	1	- Check brake light switch -F- => Perform electrical tests,from page 27
Cont'd		-F- Observe notes on data bus => page 1			Not operated	0	

Display group number 004; Display zone 4 on vehicles up to 09.99

The display zone on vehicles up to 09.99 and from 10.99 is different. For vehicles from 10.99 => page 23 .

Display Group No.	Display zone	Designation		Test conditions	Specified readout on V.A.G 1551	Rectifying fault
004	4	Solenoid valve -N91-	Position 1	Operated	1	- Check solenoid valve -N91- => Perform electrical tests, from page 27

Protected by copyright. Copying for private or commercial purposes, in part or in whole, is not permitted unless authorised by Volkswagen AG. Volkswagen AG does not guarantee or accept any liability with respect to the correctness of information in this document. Copyright by Volkswagen AG.
satelettronica

		(for lock-up clutch)	Not operated	0	
		Selector lever lock solenoid -N110-	▪ Vehicle stationary ▪ Selector lever in "P"		- Check routing of wiring on basis of current flow diagram
		Position 2	Is switched on ▪ Selector lever to "N" (is switched after approx. 2 secs.)	1	- Check selector lever lock solenoid -N110- =>Perform electrical tests, from page 27
Continued			- Operate brakes or: ▪ Selector lever in "R", "D", "3", "2" or "1" Is switched off	0	- Check brake light switch -F- =>Perform electrical tests, from page 27

Display Group No.	Display zone	Designation	Test conditions	Specified readout on V.A.G 1551	Rectifying fault
004	4	Selector outputs air conditioning Position 3	Was switched off	1	Check routing of wiring on basis of current flow diagram
			was not switched off	0	- Check air conditioner => Repair Group 87
		Cruise control system			- Check routing of wiring on basis of current flow diagram
		Position 4	Is switched on	1	- Check cruise control system
Continued			Was switched off	0	=> "Current flow diagrams, Electrical fault finding and Fitting locations" binder, => Polo 1995 ▸

Display Group No.	Display zone	Designation	Test conditions	Specified readout on V.A.G 1551	Rectifying fault
004	4	Ignition timing influence			- Check routing of wiring on basis of current flow diagram
		Position 5	Was switched on (only briefly during selector changes)	1	- Renew engine control unit => Repair group 24; Injection and ignition system Electrical/ electronic components and locations; Components in vehicle
			Is switched off	0	- Initiate basic setting =>Page 16
		Solenoid valve -N90- Position 6	Operated	1	- Check solenoid valve -N90- => Perform electrical tests, from page 27
Continued			Is not operated	0	

Protected by copyright. Copying for private or commercial purposes, in part or in whole, is not permitted unless authorised by Volkswagen AG. Volkswagen AG does not guarantee or accept any liability with respect to the correctness of information. Copyright by Volkswagen AG.

satelettronica

Display Group No.	Display zone	Designation	Test conditions	Specified readout on V.A.G 1551	Rectifying fault
004	4	Solenoid valve -N89- Position 7	Was operated	1	- Check solenoid valve -N89- => Perform electrical tests, from page 27
			Is not operated	0	
		Solenoid valve -N88- Position 8	Operated	1	- Check solenoid valve -N88- => Perform electrical tests, from page 27
			Not operated	0	

Display group number 004; Display zone 4 on vehicles from 10.99

The display zone on vehicles up to 09.99 and from 10.99 is different. For vehicles up to 09.99 => page 21 .

Display Group No.	Display zone	Designation	Test conditions	Specified readout on V.A.G 1551	Rectifying fault
004	4	Solenoid valve -N91- Position 1	Operated	1	- Check solenoid valve -N91- => Perform electrical tests, from page 27
		(for lock-up clutch)	Not operated	0	
		Selector lever lock solenoid -N110- Position 2	▪ Vehicle stationary ▪ Selector lever in "P"	1	- Check routing of wiring on basis of current flow diagram
			Is switched on ▪ Selector lever to "N" (is switched after approx. 2 secs.)		- Check selector lever lock solenoid -N110- =>Perform electrical tests, from page 27
Continued			- Operate brakes or: ▪ Selector lever in "R", "D", "3", "2" or "1" Is switched off	0	- Check brake light switch -F- =>Perform electrical tests, from page 27

Display Group No.	Display zone	Designation	Test conditions	Specified readout on V.A.G 1551	Rectifying fault
004	4	Selector outputs air conditioning Position 3	Was switched off	1	Check routing of wiring on basis of current flow diagram
			was not switched off	0	- Check air conditioner => Repair Group 87
004	4	Ignition timing influence			- Check routing of wiring using current flow diagram

satelettronica
Protected by copyright. Copying for private or commercial purposes, in part or in whole, is not permitted unless authorised by Volkswagen AG. Volkswagen AG does not guarantee or accept any liability with respect to the correctness of information in this document. Copyright by Volkswagen AG.

		Position 4 Observe notes on data bus => page 1	Was switched on (only briefly during selector changes)	1	- Renew engine control unit => Repair group 24; Injection and ignition system Electrical/ electronic components and locations; Components in vehicle
			Is switched off	0	- Initiate basic setting =>Page 16
		Solenoid valve -N90- Position 5	Operated	1	- Check solenoid valve -N90- => Performing electrical tests from page 27
Continued			Is not operated	0	

Display Group No.	Display zone	Designation	Test conditions	Specified readout on V.A.G 1551	Rectifying fault
004	4	Solenoid valve 5 -N92-	Operated	1	- Check solenoid valve 5 -N92- => Performing electrical testsfrom page 27
		Position 6	Not operated	0	
		Solenoid valve -N89- Position 7	Was operated	1	- Check solenoid valve -N89- => Performing electrical tests from page 27
			Is not operated	0	
		Solenoid valve -N88- Position 8	Operated	1	- Check solenoid valve -N88- => Perform electrical tests, from page 27
			Not operated	0	

Protected by copyright. Copyright by Volkswagen AG. Volkswagen AG does not guarantee or accept any liability with respect to the correctness of information in this document. Copying for private or commercial purposes, in part or in whole, is not permitted unless authorised by Volkswagen AG.

satelettronica

7 - End output

7.1 - End output

- Press keys -0- and -6-, this ends the output.

-> Indicated on display:

```
Rapid data transfer      Q
06 End output
```

- Confirm input with Q key.

-> Indicated on display:

```
Rapid data transfer      HELP
Select function XX
```

- Switch off ignition.
- Disconnect connection to fault reader V.A.G 1551.

8 - Checking solenoid valves whilst driving

8.1 - Checking solenoid valves whilst driving

8.2 - For vehicles up to >09.99

- The solenoid valves can be checked whilst driving via "Read measured value block 08"; "Display group number 004". A second mechanic is required for the read out whilst driving.
- The table shows the activated solenoid valves -N88- and -N89- in each selector lever position. These solenoid valves control the switching elements to the relevant gears.
- The solenoid valve -N91- activates the lock-up clutch modulation valve.
- Solenoid valves -N90- and -N93- are valves which indirectly influence the switching to achieve a higher switch comfort.
  -N90- = Time delay valve,
  -N93- = Main pressure valve (not displayed in display group number 004).
- All solenoid valves are checked via self-diagnosis => Interrogating fault memory, page 9 .
- V.A.G 1551 display zone 4 has 8 digits (Example: 01000011).
- Only positions 1, 7 and 8 are of importance.

Example: Selector lever position "P" - Displayed on V.A.G 1551 Display group number 04 - Display zone 4:							
Position 1	Position 2	Position 3	Position 4	Position 5	Position 6	Position 7	Position 8
0	1	0	0	0	0	**1**	**1**
-N91-	Selector lever solenoid (solenoid)	Air conditioning system (A/C)	Cruise control system (CCS)	Ignition timing influence (ITI)	-N90-	-N89-	-N88-
	These signals can be disregarded						

Checking solenoid valves and switch element positions whilst driving

Selector lever position: "D", Test speed: faster than 10 km/h (approx. 6.25 mph)															
	Solenoid valves (on display in display zone 4)								Switch element position1)						
Gear	N91	(Solenoid)	(A/C)	(CCS)	(ITI)	N90	N89	N88	K1	K2	K3	B1	B2	F	ÜK
1	0	0	0	0	0	1	1	1	X					X	
2	0	0	0	0	0	1	1	0	X				X		
3H	0	0	0	0	0	1	0	0	X		X				
3M	1	0	0	0	0	1	0	0	X		X				X
4H	0	0	0	0	0	1	0	1			X		X		
4M	1	0	0	0	0	1	0	1			X		X		X
	These signals (positions 2 ⇒6 indicated in display zone 4) can be disregarded						X = Engaged clutches, brakes or freewheel								

- M = mechanical
- H = hydraulic

satelettronica

- Non-activated solenoid valves display "0" and activated solenoid valves display "1".

1) K 1 = 1st to 3rd gear clutch; B 1 = Reverse and 1st gear brake

K 2 = Reverse gear clutch; B 2 = 2nd and 4th gear brake

K 3 = 3rd and 4th gear clutch; F = Freewheel

ÜK = Lock-up clutch

8.3 - On vehicles from 10.99 >

- The solenoid valves can be checked whilst driving via "Read measured value block 08"; "Display group number 004". A second mechanic is required for the read out whilst driving.
- The table shows the activated solenoid valves -N88- and -N89- and -N92- in each selector lever position. These solenoid valves control the switching elements to the relevant gears.
- The solenoid valve -N91- activates the lock-up clutch modulation valve.
- Solenoid valves -N90- and -N93- are valves, which indirectly influence the switching to achieve a higher switch comfort.
  -N90- = Time delay valve,
  -N93- = Main pressure valve (not displayed in display group number 004).
- All solenoid valves are checked via self-diagnosis => Interrogating fault memory, page 9 .
- V.A.G 1551 display zone 4 has 8 digits (Example: 01000011).
- Only positions 1, 6, 7 and 8 are of importance.

Example: Selector lever position "P" - Displayed on V.A.G 1551 Display group number 04 - Display zone 4:							
Position 1	Position 2	Position 3	Position 4	Position 5	Position 6	Position 7	Position 8
0	1	0	0	0	0	1	1
-N91-	Selector lever solenoid (solenoid)	Air conditioning system (A/C)	Ignition timing influence (ITI)	-N90-	-N92-	-N89-	-N88-
	These signalscan be disregarded						

Checking solenoid valves and switch element positions whilst driving

Selector lever position: "D", Test speed: faster than 10 km/h (approx. 6.25 mph)															
	Solenoid valves (on display in display zone 4)								Switch element position1)						
Gear	N91	(Solenoid)	(A/C)	(ITI)	N90	N92	N89	N88	K1	K2	K3	B1	B2	F	ÜK
1	0	0	0	0	1	1	0	1	X					X	
2	0	0	0	0	1	1	1	1	X				X		
3H	0	0	0	0	1	0	1	0	X		X				
3M	1	0	0	0	1	0	1	0	X		X				X
4H	0	0	0	0	1	0	1	1			X		X		
4M	1	0	0	0	1	0	1	1			X		X		X
- only check positions 1, 6, 7 and 8 in the display !									X = engaged clutches, brakes or freewheel						

- M = mechanical
- H = hydraulic

satelettronica

- Non-activated solenoid valves display "0" and activated solenoid valves display "1".

1) K 1 = 1st to 3rd gear clutch; B 1 = Reverse and 1st gear brake

K 2 = Reverse gear clutch; B 2 = 2nd and 4th gear brake

K 3 = 3rd and 4th gear clutch; F = Freewheel

ÜK = Lock-up clutch

9 - Gearbox: Electrical check

9.1 - Gearbox: Electrical check

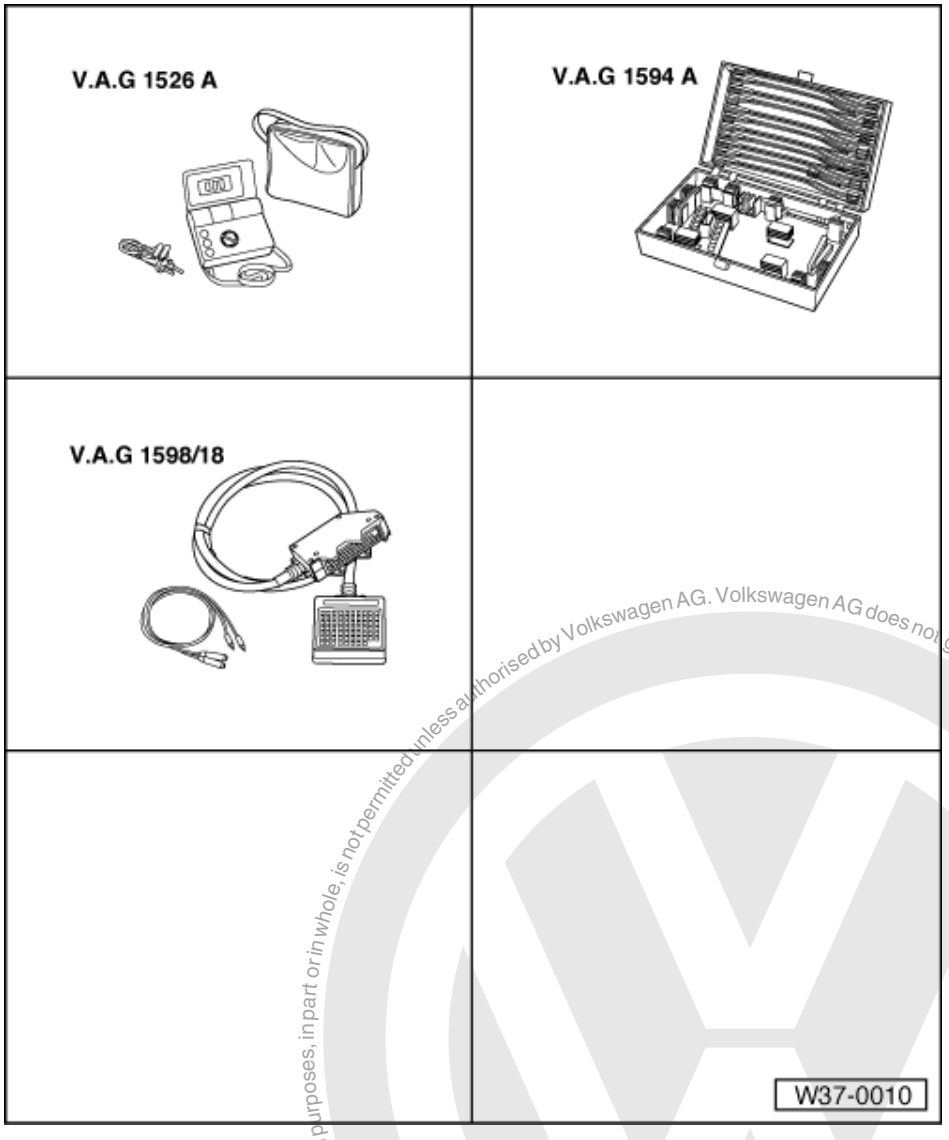

Special tools and workshop equipment required

- V.A.G 1526 A Hand multimeter
- V.A.G 1594 A Adapter set
- V.A.G 1598/18 Test box

Protected by copyright. Copying for private or commercial purposes, in part or in whole, is not permitted unless authorised by Volkswagen AG. Volkswagen AG does not guarantee or accept any liability with respect to the correctness of information in this document. Copyright by Volkswagen AG.
satelettronica

Additional information required

- Workshop Manual Polo 1995 ▸, Automatic gearbox 001
- "Current flow diagrams, Electrical fault finding and Fitting locations" binder, Polo 1995 ▸

Test requirements:

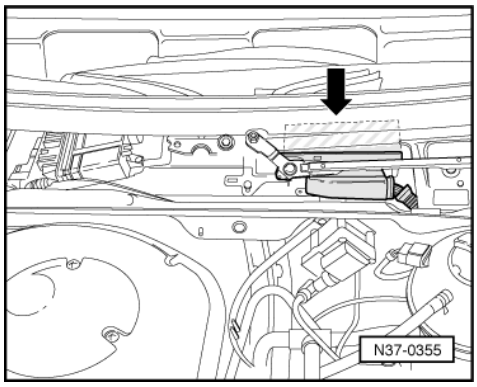

- Battery voltage in order.
- Vehicle voltage supply in order.
- Fuses in main fuse box OK.
- Fuses No. 14, 21, 25, 29 and 33 OK.
- Check earth connections for gearbox:

-> The gearbox control unit (arrow) is located in the plenum chamber.

- Check earth connections for corrosion and poor contact; repair if necessary.

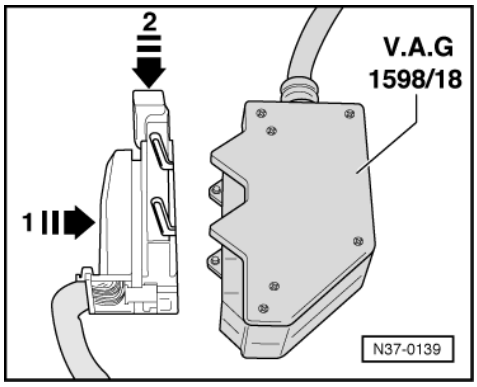

- Earth connection point is located under battery.
- Check battery earth strap and earth strap between battery and gearbox.
- Switch ignition off, release multi-pin connector and pull off control unit.
- -> Fit test box V.A.G 1598/18 onto multi-pin connector (1) and lock, in direction of arrow (2).

Using test box V.A.G 1598/18 the wiring can be checked according to current flow diagram.

- Before connecting the test leads the correct measuring range on tester must be adjusted. Otherwise the electronic components can be destroyed !

- Use the hand multimeter V.A.G 1526 with auxiliary cables from V.A.G 1594 for testing.
- The specified values are valid for an ambient temperature from 0 °C...40 °C.
- If the readings obtained differ from the specified values, determine fault on the basis of the current flow diagram.
- If the readings obtained differ only slightly from the specified values, clean sockets and connectors of the testers and test leads and repeat test. Before replacing the particular components, test wiring and connections and, particularly if specified values are below 10 ω, repeat resistance measurement on component.

Protected by copyright. Copying for private or commercial purposes, in part or in whole, is not permitted unless authorised by Volkswagen AG. Volkswagen AG does not guarantee or accept any liability with respect to the correctness of information in this document. Copyright by Volkswagen AG.
satelettronica

9.2 - Electrical check for vehicles up to > 09.99 (with 45-pin control unit connector)

Control unit -J217- multi-pin connector (45 pin) assignment (sockets on V.A.G 1598/18)

1- Earth (terminal 31)	20- Kickdown switch -F8-
2- Series resistance for solenoid valve -N207-	21- Brake light switch -F- signal voltage
3- Solenoid valve 6 voltage supply -N93-	22- Fault memory supply voltage (terminal 30)
4- Vacant	23- Supply voltage (terminal 15)
5- K-wire for diagnosis	24- Earth (terminal 31)
6- Selector lever lock solenoid -N110-	25- Solenoid valve 4 -N91-
7- Solenoid valve 1 -N88-	26- Solenoid valve 3 -N90-
8- Solenoid valve 2 -N89-	27- Ignition timing point influence
9- Gearbox speed sensor -G38-	28- Vacant
10- Gearbox speed sensor -G38-	29- Vacant
11- Gearbox speed sensor -G38- (screening)	30- Vacant
12- Vacant	31- Vacant
13- TD signal (rpm)	32- Vacant
14- Throttle valve potentiometer -G69- signal1)	33- Gearbox oil temperature sender -G93- (ATF)
15- Vacant	34- Gearbox oil temperature sender -G93- (ATF)
16- Vacant	35- Road speed sender -G68-
17- Vacant	36- Road speed sender -G68-
18- Multifunction switch -F125- (position "1")	37- Road speed sender -G68- (screening)
19- Multifunction switch -F125- (position "2")	38- Vacant

1) Signal (contact 14) directed via engine control unit to gearbox control unit and can only be checked in "Reading measured value block" => Page 17 .

39- Vacant	
40- Multifunction switch -F125- (position "R")	
41- Multifunction switch -F125- (position "N")	
42- Multifunction switch -F125- (position "P")	
43- Multifunction switch -F125- (position "3")	
44- Multifunction switch -F125- (position "D")	
45- Supply voltage (terminal 15)	
46 to 68 vacant	

Test step overview

Only perform test steps for the relevant component as listed in fault finding table and measured value block.

Component checked		Component checked	
Voltage supply from control unit -J217-	- Perform test step 1	Solenoid valve 3 -N90-	- Perform test step 10
Selector lever lock solenoid -N110-	- Perform test step 2	Solenoid valve 4 -N91-	- Perform test step 11
Brake light switch -F-	- Perform test step 3	Solenoid valve 6 -N93-	- Perform test step 12
Multifunction switch -F125-	- Perform test step 4	Series resistance -N207-	- Perform test step 13
Kickdown switch -F8-	- Perform test step 5	Gearbox oil temperature sender -G93-	- Perform test step 14
Road speed sender -G68-	- Perform test step 6		

Protected by copyright. Copying for private or commercial purposes, in part or in whole, is not permitted unless authorised by Volkswagen AG. Volkswagen AG does not guarantee or assume any liability with respect to the correctness of information in this document. Copyright by Volkswagen AG.
satelettronica

Gearbox speed sender -G38-	- Perform test step 7	
Solenoid valve 1 -N88-	- Perform test step 8	
Solenoid valve 2 -N89-	- Perform test step 9	

9.3 - Test table for vehicles up to > 09.99 (with 45-pin control unit connector)

Switch to voltage measuring range 20 V					
Test step	V.A.G 1598/18 sockets	Test of	▪ Test conditions - Additional operations	Specified value	Rectifying fault
1	45 + 1 23 + 1	Supply voltage for control unit -J217- (terminal 15)	▪ Ignition switched on	approx. battery voltage	- Check wiring using current flow diagram Check wiring from contact 1 to earth Check wiring from contact 45 + 23 to terminal 15 central electrics
	22 + 1	Supply voltage for fault memory in control unit -J217- (terminal 30)		approx. battery voltage	- Check wiring from contact 22 to terminal 30 central electrics Check battery, renew if necessary Renew gearbox control unit -J217- if necessary => Automatic gearbox 001; Repair group 37; Electrical/electronic components and locations; Components in vehicle Electrical/electronic components and locations; Components in vehicle

Switch to voltage measuring range 20 V					
Test step	V.A.G 1598/18 sockets	Test of	▪ Test conditions - Additional operations	Specified value	Rectifying fault
2	6 + 1	Selector lever lock solenoid -N110-	▪ Ignition switched off	0 V	- Check wiring using current flow diagram
			▪ Ignition switched on	approx. battery voltage	
	Bridge 6 + 1		- Connect test unit V.A.G 1526 ▪ Ignition switched on Connect bridge with cables from V.A.G 1594	Solenoid must audibly click	- Renew selector lever lock solenoid -N110- => Repair group 37; Servicing selector mechanism

Protected by copyright. Copying for private or commercial purposes, in part or in whole, is not permitted unless authorised by Volkswagen AG. Volkswagen AG does not guarantee or accept any liability with respect to the correctness of information in this document. Copyright by Volkswagen AG.
satelettronica

3	21 + 1	Brake light switch -F-	▪ Brake pedal not depressed	0 V	- Check wiring according to current flow diagram Renew brake light switch -F-
			- Brake pedal depressed	approx. battery voltage	=> Running gear, self-diagnosis for ABS; Repair group 01; Electrical/electronic components and locations Electrical/ electronic components and locations

Switch to voltage measuring range 20 V					
Test step	V.A.G 1598/18 sockets	Test of	▪ Test conditions - Additional operations	Specified value	Rectifying fault
4	42 + 1	Multi-function switch -F125-	- Selector lever position P	approx. battery voltage	- Check connector on multi-function switch above gearbox for contact corrosion, renew if necessary
			▪ Selector lever position R, N, D, 3, 2, 1	0 -1 V	- Adjust multi-function switch -F125- => Automatic gearbox 001; Repair group 37; Electrical/electronic components and locations; Components on gearbox Electrical/ electronic components and locations; Components on gearbox
	40 + 1	Multi-function switch -F125-	▪ Selector lever position R	approx. battery voltage	- Check wiring according to current flow diagram

satelettronica
Protected by copyright. Copying for private or commercial purposes, in part or whole, is not permitted unless authorised by Volkswagen AG. Volkswagen AG does not guarantee or accept any liability with respect to the correctness of information in this document. Copyright by Volkswagen AG.

			▪ Selector lever position P, N, D, 3, 2, 1	0 -1 V	- Renew multi-function switch -F125- => Automatic gearbox 001; Repair group 37; Electrical/electronic components and locations; Components on gearbox Electrical/electronic components and locations; Components on gearbox
	41 + 1	Multi-function switch -F125-	▪ Selector lever position N	approx. battery voltage	
			▪ Selector lever position P, R, D, 3, 2, 1	0 -1 V	

Continued on next page

Switch to voltage measuring range 20 V					
Test step	V.A.G 1598/18 sockets	Test of	▪ Test conditions - Additional operations	Specified value	Rectifying fault
4	44 + 1	Multi-function switch -F125-	- Selector lever position D	approx. battery voltage	- Check connector on multi-function switch above gearbox for contact corrosion, renew if necessary
			▪ Selector lever position P, R, N, 3, 2, 1	0 -1 V	- Adjusting multi-function switch -F125- => Automatic gearbox 001; Repair group 37; Electrical/electronic components and locations; Components on gearbox Electrical/electronic components and locations; Components on gearbox
	43 + 1	Multi-function switch -F125-	▪ Selector lever position 3	approx. battery voltage	- Check wiring according to current flow diagram
			▪ Selector lever position P, R, N, D, 2, 1	0 -1 V	- Renew multi-function switch -F125-

Protected by copyright. Copying for private or commercial purposes, in part or in whole, is not permitted unless authorised by Volkswagen AG. Volkswagen AG does not guarantee or accept any liability with respect to the correctness of information in this document. Copyright by Volkswagen AG.

satelettronica

	19 + 1	Multi-function switch -F125-	▪ Selector lever position 2	approx. battery voltage	=> Automatic gearbox 001; Repair group 37; Electrical/electronic components and locations; Components on gearbox Electrical/ electronic components and locations; Components on gearbox
			▪ Selector lever position P, R, N, D, 3, 1	0 -1 V	
	18 + 1	Multi-function switch -F125-	▪ Selector lever position 1	approx. battery voltage	
			▪ Selector lever position P, R, N, D, 3, 2	0 -1 V	

Switch to resistance measuring range 200 ω					
Test step	V.A.G 1598/18 sockets	Test of	▪ Test conditions - Additional operations	Specified value	Rectifying fault
5	20 + 1	Kickdown switch -F8-	▪ Ignition switched off ▪ Accelerator not depressed	infinite ω1)	- Check wiring on basis of current flow diagram - Adjust accelerator cable or renew => Repair Group 20; Adjusting accelerator cable
			- Depress accelerator as far as kickdown	less than 1.5 ω	

1) Switch V.A.G 1526 to highest ω range

Switch to resistance measuring range 2 k ω					
Test step	V.A.G 1598/18 sockets	Test of	▪ Test conditions - Additional operations	Specified value	Rectifying fault
6	35 + 36	Road speed sender -G68-	min.	0.4 kω	- Check wiring on basis of current flow diagram

Protected by copyright. Copyright by Volkswagen AG. Volkswagen AG does not guarantee or accept any liability with respect to the correctness of information in this document. Copyright by Volkswagen AG. Protected by copyright. Copyright by Volkswagen AG. Volkswagen AG does not guarantee or accept any liability with respect to the correctness of information in this document. Copyright by Volkswagen AG. Protected by copyright. Copyright by Volkswagen AG. Volkswagen AG does not guarantee or accept any liability with respect to the correctness of information in this document. Copyright by Volkswagen AG. Protected by copyright. Copyright by Volkswagen AG. Volkswagen AG does not guarantee or accept any liability with respect to the correctness of information in this document. Copyright by Volkswagen AG. Protected by copyright. Copyright by Volkswagen AG. Volkswagen AG does not guarantee or accept any liability with respect to the correctness of information in this document. Copyright by Volkswagen AG. Protected by copyright. Copyright by Volkswagen AG. Volkswagen AG does not guarantee or accept any liability with respect to the correctness of information in this document. Copyright by Volkswagen AG. Protected by copyright. Copyright by Volkswagen AG. Volkswagen AG does not guarantee or accept any liability with respect to the correctness of information in this document. Copyright by Volkswagen AG. Protected by copyright. Copyright by Volkswagen AG. Volkswagen AG does not guarantee or accept any liability with respect to the correctness of information in this document. Copyright by Volkswagen AG. Protected by copyright. Copyright by Volkswagen AG. Volkswagen AG does not guarantee or accept any liability with respect to the correctness of information in this document. Copyright by Volkswagen AG. Protected by copyright. Copyright by Volkswagen AG. Volkswagen AG does not guarantee or accept any liability with respect to the correctness of information in this document. Copyright by Volkswagen AG. Protected by copyright. Copyright by Volkswagen AG. Volkswagen AG does not guarantee or accept any liability with respect to the correctness of information in this document. Copyright by Volkswagen AG.

satelettronica

			max.	0.6 kω	- Renew road speed sender -G68- => Automatic gearbox 001; Repair group 37; Electrical/electronic components and locations; Components on gearbox Electrical/electronic components and locations; Components on gearbox

Switch to resistance measuring range 20 k ω					
Test step	V.A.G 1598/18 sockets	Test of	▪ Test conditions - Additional operations	Specified value	Rectifying fault
7	9 + 10	Gearbox speed sender -G38-	min.	0.4 kω	- Check wiring on basis of current flow diagram
			max.	0.6 kω	- Renew gearbox speed sender -G38- => Automatic gearbox 001; Repair group 37; Electrical/electronic components and locations; Components on gearbox Electrical/electronic components and locations; Components on gearbox

Switch to resistance measuring range 200 ω					
Test step	V.A.G 1598/18 sockets	Test of	▪ Test conditions - Additional operations	Specified value	Rectifying fault
8	7 + 1	Solenoid valve 1 -N88-	▪ Ignition switched off	9 to 24 ω	- Check wiring according to current flow diagram, renew if necessary
9	8 + 1	Solenoid valve 2 -N89-	▪ Ignition switched off	9 to 24 ω	
10	26 + 1	Solenoid valve 3 -N90-	▪ Ignition switched off	9 to 24 ω	
11	25 + 1	Solenoid valve 4 -N91-	▪ Ignition switched off	9 to 24 ω	
12	3 + 1	Solenoid valve 6 -N93-	▪ Ignition switched off Separate connector for series resistance -N207-	2 to 5 ω	

Copyright by Volkswagen AG. Volkswagen AG does not guarantee or accept any liability with respect to the correctness of information in this document. Copying for private or commercial purposes, in part or in whole, is not permitted unless authorised by Volkswagen AG.
satelettronica

13	Measure at component	Series resistance -N207-	- Remove resistance connection from bracket on top of gearbox and separate Measure at connector with cable	10 to 15 ω	" " If the value is not attained: Renew resistance

Switch to resistance measuring range 20 k ω					
Test step	V.A.G 1598/18 sockets	Test of	▪ Test conditions - Additional operations	Specified value	Rectifying fault
14	33 + 34	Gearbox oil temperature sender -G93- (ATF)	▪ Ignition switched off ▪ ATF temperature approx. 30 °C - Switch hand multimeter V.A.G 1526 to 2 k ω approx. 70° C approx. 110° C	2.2 k ω 0.5 k ω 0.2 k ω	- Check wiring on basis of current flow diagram

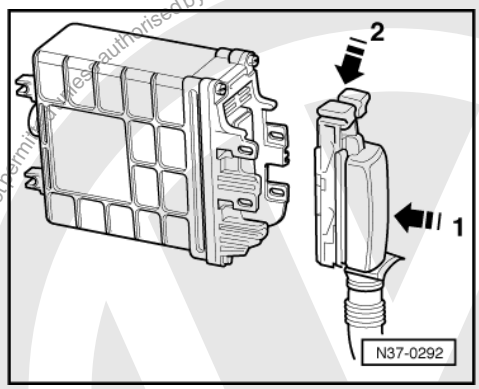

After electrical checks

- -> Fit multi-pin connector onto control unit -J217- pins -1- then lock multi-pin connector -2-.

When fitting ensure that the guides are engaged on control unit pins.

9.4 - Electrical check for vehicles from 10.99 >(with 68-pin control unit connector)

Multi-pin control unit connector (68-pin connector) -J217- (sockets on V.A.G 1598/18)

1- Earth (terminal 31)	18- Multi-function switch -F125- (position "1")
2- Vacant	19- Multi-function switch -F125- (position "2")
3- Vacant	20- Vacant
4- Vacant	21- Brake light switch -F- signal voltage
5- K-lead of diagnosis	22- Supply voltage (terminal 30)
6- Selector lever lock solenoid -N110-	23- Vacant
7- Vacant	24- Earth (terminal 31)
8- Vacant	25- Solenoid valve 4 -N91-
9- Gearbox speed sender -G38-	26- Solenoid valve 3 -N90-
10- Gearbox speed sender -G38-	27- Vacant

Protected by copyright. Copying for private or commercial purposes, in part or in whole, is not permitted unless authorised by Volkswagen AG. Volkswagen AG does not guarantee or accept any liability with respect to the correctness of information in this document. Copyright by Volkswagen AG.
satelettronica

11- Gearbox speed sender -G38- (screening)	28- Vacant
12- Vacant	29- Vacant
13- Vacant	30- Vacant
14- Vacant	31- Vacant
15- Data bus low, input and output signals	32- Vacant
16- Data bus high, input and output signals	33- Gearbox oil temperature sender -G93- (ATF)
17- Brake pressure switch (only on vehicles with stationary de-coupling)	34- Gearbox oil temperature sender -G93- (ATF)

35- Road speed sender -G68-	52- Vacant
36- Road speed sender -G68-	53- Vacant
37- Road speed sender -G68- (screening)	54- Vacant
38- Vacant	55- Vacant
39- Vacant	56- Vacant
40- Multi-function switch -F125- (position "R")	57- Vacant
41- Multi-function switch -F125- (position "N")	58- Vacant
42- Multi-function switch -F125- (position "P")	59- Vacant
43- Multi-function switch -F125- (position "3")	60 Vacant
44- Multi-function switch -F125- (position "D")	61- Vacant
45- Supply voltage (terminal 15)	62- Vacant
46- Vacant	63- Vacant
47- Vacant	64- Earth return wire (to valve diagnosis)
48- Solenoid valve 1 -N88-	65- Vacant
49- Solenoid valve 2 -N89-	66- Solenoid valve 6 supply voltage -N93-
50- Solenoid valve 5 -N92-	67- Vacant
51- Vacant	68- Supply voltage (terminal 15)

Test step overview

Only perform test steps for the relevant component as listed in fault finding table and measured value block.

Component checked		Component checked	
Voltage supply from control unit -J217-	- Perform test step 1	Solenoid valve 3 -N90-	- Perform test step 9
Selector lever lock solenoid -N110-	- Perform test step 2	Solenoid valve 4 -N91-	- Perform test step 10
Brake light switch -F-	- Perform test step 3	Solenoid valve 5 -N92-	- Perform test step 11
Multifunction switch -F125-	- Perform test step 4	Solenoid valve 6 -N93-	- Perform test step 12
Road speed sender -G68-	- Perform test step 5	Gearbox oil temperature sender -G93-	- Perform test step 13
Gearbox speed sender -G38-	- Perform test step 6		

Volkswagen AG. Volkswagen AG does not guarantee or accept any liability with respect to the correctness of information in this document. Copyright by Volkswagen AG. Protected by copyright. Copying for private or commercial purposes, in part or in whole, is not permitted unless authorised by Volkswagen AG.
satelettronica

Solenoid valve 1 -N88-	- Perform test step 7	
Solenoid valve 2 -N89-	- Perform test step 8	

9.5 - Test table for vehicles from 10.99 > (with 68-pin control unit connector)

Switch to voltage measuring range 20 V					
Test step	V.A.G 1598/18 sockets	Test of	▪ Test conditions - Additional operations	Specified value	Rectifying fault
1	45 + 1 68 + 1	Supply voltage for control unit -J217- (terminal 15)	▪ Ignition switched on	approx. battery voltage	- Check wiring using current flow diagram Check wiring from contact 1 to earth Check wiring from contact 45 + 23 to terminal 15 central electrics
	22 + 1 22 + 24	Supply voltage for fault memory in control unit -J217- (terminal 30)	▪ Ignition switched off	approx. battery voltage	- Check wiring from contact 1 to earth Check wiring from contact 22 to contact 30 central electrics Check battery, renew if necessary Renew gearbox control unit -J217 if necessary => Automatic gearbox 001; Repair group 37; Electrical/electronic components and locations; Components in vehicle Electrical/electronic components and locations; Components in vehicle

Switch to voltage measuring range 20 V					
Test step	V.A.G 1598/18 sockets	Test of	▪ Test conditions - Additional operations	Specified value	Rectifying fault
2	6 + 1	Selector lever lock solenoid -N110-	▪ Ignition switched off	0 V	- Check wiring using current flow diagram
			▪ Ignition switched on	approx. battery voltage	
	Bridge 6 + 1		- Connect test unit V.A.G 1526 ▪ Ignition switched on Connect bridge with cables from V.A.G 1594	Solenoid must audibly click	- Renew selector lever lock solenoid -N110- => Repair group 37; Servicing selector mechanism

Protected by copyright. Copying for private or commercial purposes, in part or in whole, is not permitted unless authorised by Volkswagen AG. Volkswagen AG does not guarantee or accept any liability with respect to the correctness of information in this document. Copyright by Volkswagen AG.
satelettronica

Protected by copyright. Copying for private or commercial purposes, in part or in whole, is not permitted unless authorised by Volkswagen AG. Volkswagen AG does not guarantee or accept any liability with respect to the correctness of information in this document. Copyright by Volkswagen AG.

3	21 + 1	Brake light switch -F-	▪ Brake pedal not depressed	0 V	- Check wiring according to current flow diagram Renew brake light switch -F-
			- Brake pedal depressed	approx. battery voltage	=> Running gear, self-diagnosis for ABS; Repair group 01; Electrical/electronic components and locations Electrical/electronic components and locations

Switch to voltage measuring range 20 V					
Test step	V.A.G 1598/18 sockets	Test of	▪ Test conditions - Additional operations	Specified value	Rectifying fault
4	42 + 1	Multi-function switch -F125-	- Selector lever position P	approx. battery voltage	- Check connector on multi-function switch above gearbox for contact corrosion, renew if necessary
			▪ Selector lever position R, N, D, 3, 2, 1	0 -1 V	- Adjust multi-function switch -F125- => Automatic gearbox 001; Repair group 37; Electrical/electronic components and locations; Components on gearbox Electrical/electronic components and locations; Components on gearbox
	40 + 1	Multi-function switch -F125-	▪ Selector lever position R	approx. battery voltage	- Check wiring according to current flow diagram
			▪ Selector lever position P, N, D, 3, 2, 1	0 -1 V	- Renew multi-function switch -F125-

satelettronica

	41 + 1	Multi-function switch -F125-	▪ Selector lever position N	approx. battery voltage	=> Automatic gearbox 001; Repair group 37; Electrical/electronic components and locations; Components on gearbox Electrical/ electronic components and locations; Components on gearbox
			▪ Selector lever position P, R, D, 3, 2, 1	0 -1 V	
Continued on next page					

Switch to voltage measuring range 20 V					
Test step	V.A.G 1598/18 sockets	Test of	▪ Test conditions - Additional operations	Specified value	Rectifying fault
4	44 + 1	Multi-function switch -F125-	- Selector lever position D	approx. battery voltage	- Check connector on multi-function switch above gearbox for contact corrosion, renew if necessary
			▪ Selector lever position P, R, N, 3, 2, 1	0 -1 V	- Adjusting multi-function switch -F125- => Automatic gearbox 001; Repair group 37; Electrical/electronic components and locations; Components on gearbox Electrical/ electronic components and locations; Components on gearbox
	43 + 1	Multi-function switch -F125-	▪ Selector lever position 3	approx. battery voltage	- Check wiring according to current flow diagram
			▪ Selector lever position P, R, N, D, 2, 1	0 -1 V	- Renew multi-function switch -F125-

Protected by copyright. Copying for private or commercial purposes, in part or in whole, is not permitted unless authorised by Volkswagen AG. Volkswagen AG does not guarantee or accept any liability with respect to the correctness of information in this document. Copyright by Volkswagen AG.
satelettronica

Protected by copyright. Copyright by Volkswagen AG. Volkswagen AG does not guarantee or accept any liability with respect to the correctness of information in this document. Copyright by Volkswagen AG. Protected by copyright. Copying for private or commercial purposes, in part or in whole, is not permitted unless authorised by Volkswagen AG.

	19 + 1	Multi-function switch -F125-	▪ Selector lever position 2	approx. battery voltage	=> Automatic gearbox 001; Repair group 37; Electrical/electronic components and locations; Components on gearbox Electrical/ electronic components and locations; Components on gearbox
			▪ Selector lever position P, R, N, D, 3, 1	0 -1 V	
	18 + 1	Multi-function switch -F125-	▪ Selector lever position 1	approx. battery voltage	
			▪ Selector lever position P, R, N, D, 3, 2	0 -1 V	

Switch to resistance measuring range 2 k ω					
Test step	V.A.G 1598/18 sockets	Test of	▪ Test conditions - Additional operations	Specified value	Rectifying fault
5	35 + 36	Road speed sender -G68-	min.	0.4 kω	- Check wiring using current flow diagram
			max.	0.6 kω	- Renew road speed sender -G68- => Automatic gearbox 001; Repair group 37; Electrical/electronic components and locations; Components on gearbox Electrical/electronic components and locations; Components on gearbox
6	9 + 10	Gearbox speed sender -G38-	min.	0.4 kω	- Check wiring using current flow diagram
			max.	0.6 kω	- Renew gearbox speed sender -G38- => Automatic gearbox 001; Repair group 37; Electrical/electronic components and locations; Components on gearbox Electrical/electronic components and locations; Components on gearbox

Switch to resistance measuring range 200 ω

satelettronica

Test step	V.A.G 1598/18 sockets	Test of	▪ Test conditions - Additional operations	Specified value	Rectifying fault
7	48 + 1	Solenoid valve 1 - N88-	▪ Ignition switched off	9 to 24 ω	- Check wiring using current flow diagram and renew wires if necessary
8	49 + 1	Solenoid valve 2 - N89-	▪ Ignition switched off	9 to 24 ω	
9	26 + 1	Solenoid valve 3 - N90-	▪ Ignition switched off	9 to 24 ω	
10	25 + 1	Solenoid valve 4 - N91-	▪ Ignition switched off	9 to 24 ω	
11	50 + 1	Solenoid valve 5 - N92-	▪ Ignition switched off	9 to 24 ω	
12	66 + 1	Solenoid valve 6 - N93-	▪ Ignition switched off	9 to 24 ω	

Switch to resistance measuring range 20 k ω					
Test step	V.A.G 1598/18 sockets	Test of	▪ Test conditions - Additional operations	Specified value	Rectifying fault
13	33 + 34	Gearbox oil temperature sender -G93- (ATF)	▪ Ignition switched off ▪ ATF temperature approx. 30 °C - Switch hand multimeter V.A.G 1526 to 2 k ω approx. 70° C approx. 110° C	2.2 k ω 0.5 k ω 0.2 k ω	- Check wiring using current flow diagram

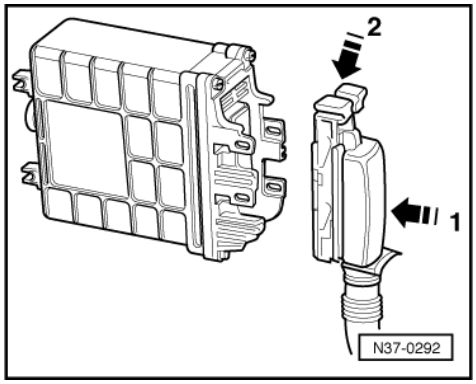

After electrical checks

- -> Fit multi-pin connector onto control unit -J217- pins -1- then lock multi-pin connector -2-.

When fitting ensure that the guides are engaged on control unit pins.

Protected by copyright. Copying for private or commercial purposes, in part or in whole, is not permitted unless authorised by Volkswagen AG. Volkswagen AG does not guarantee or accept any liability with respect to the correctness of information in this document. Copyright by Volkswagen AG.
satelettronica

10 - Definitions

10.1 - Definitions

These explanations refer only to this assembly group: Self-diagnosis for automatic gearbox 001. These definitions are not necessarily generally valid.

Further information on this subject can be found in

- Self-study programme No.176.
- Workshop Manual Lupo 1999 ▸, Automatic gearbox 001

ABS

Anti-locking brake system. Further information on the ABS can be found in the relevant self-study programmes.

ATF (Automatic Transmission Fluid)

Gearbox oil for automatic gearbox

Display zone => Read measured value block

Display group number => Read measured value block

Throttle valve potentiometer

An engine component. The "throttle valve signal" originates from here.

Self-diagnosis

The capability of the control unit:

to recognise faults,

to react to faults,

to store faults,

to register faults and make them available in the measured value block.

Performing self-diagnosis

Connecting the fault reader to be able to interrogate the fault memory.

Performing electrical check

A targeted check of the electronic components by performing certain measurements.

Electronic power control (EPC)

Terms like: EPC, electronic accelerator, accelerator module and electric throttle operation all refer to this component. Among other things, senders -G79- and -G185- and a throttle valve positioner are housed within.

EPC is always a component of engine control and thus communicates initially with the engine control unit. Because when doing this, for example, the signal for the kickdown switch is also generated, the engine control unit stores the data in the data bus, in order that other control units have access to it.

Further information on this subject can be found in

- Self-study programme no. 210.

Protected by copyright. Copyright by Volkswagen AG. Volkswagen AG does not guarantee or accept any liability with respect to the correctness of information in this document. Copyright by Volkswagen AG. Reproduction for private or commercial purposes, in part or in whole, is not permitted unless authorised by Volkswagen AG.
satelettronica

Throttle position sender

=>Electronic power control (EPC)

Gearbox speed sender -G38-

The sender records the speed of -K3- and transmits it to the automatic gearbox control unit.

Road speed sender -G68-

The sender records the speed of the output gear and transmits it to the automatic gearbox control unit (not to the speedometer).

Initiating basic setting

The values learnt in the control unit are turned back to the initial values.

No communication

There is no connection for exchanging information between the control units.

Kickdown switch -F8-

The kickdown switch is integrated into the accelerator cable. When the accelerator pedal is depressed fully onto its stop the gearbox changes down for acceleration.

Short to earth

Current flows -incorrectly- to earth without supplying a consumer.

Short to positive

Current flows -incorrectly- to a live component without supplying a consumer.

Wiring

Routing of electrical wiring and components in vehicle.

Selector lever lock magnet N110

Located in the selector mechanism close to the selector lever. Prevents movement (involuntary) of the selector lever from positions "P" and "N" as long as the brake pedal is not depressed.

Solenoid valves

Opens and closes the oil channels to the clutches and brakes.

Read measured value block

The control unit can transfer a considerable amount of test data. This test data delivers information on the operational condition of the system and/or sensors connected to it. In many cases the transferred test data supports fault finding and fault rectification. The test data has been summarized into single display groups because all the information cannot be evaluated at the same time. The information can be selected via display group numbers.

(If you can only select a two character display group number, you have an old programme card in your V.A.G 1551 ! Replace the card with a valid version).

Each display group number is displayed on the fault reader as four display zones.

A display zone can be displayed as an eight digit row or as values. These values are sometimes displayed with a measurement symbol.

Protected copyright. Copyright by Volkswagen AG.
Reproduction or commercial purposes, in part or in whole, is not permitted unless authorised by Volkswagen AG. Volkswagen AG does not guarantee or accept any liability with respect to the correctness of information in this document.
satelettronica

Emergency running

"Condition of the control unit" when certain faults are recognised in order to maintain driving safety, to protect the gearbox against damage and at the same time to ensure that driving characteristics are impaired as little as possible.

Pendulum support

Designation for a part of the assembly mounting.

Programme card version

Always use the most up-to-date programme card. Further information can be found in the test unit operating instructions.

Sporadic

Happens occasionally

Stationary uncoupling

The gearbox shifts into neutral hydraulically when the vehicle is stationary.

Static

Present at the moment, continuous

TDC signal

The signal is used to calculate the engine speed.

Infinity ω

The resistance is infinite, open circuit.

ω = Ohm

TCC (Torque converter lock-up clutch)

Transfers the engine torque mechanically to the gearbox.

Ignition timing control

The engine torque is reduced during the gear shift process by altering the ignition timing.

Protected by copyright. Copying for private or commercial purposes, part or in whole, is not permitted unless authorised by Volkswagen AG. Volkswagen AG does not guarantee or accept any liability with respect to the correctness of information in this document. Copyright by Volkswagen AG.

satelettronica